Lindau Calibration Photometer

- Built in 1984 (W. Barke and H. Lauche)
- Uses Fritz Peak standard source
- All sources measured at 7 wavelengths from 391.4 nm to 656.2 nm (in Rayleigh/Angstrom)
- Accuracy with ± 10%
- Inter-calibrations/cross-calibrations
  - Brightness of the standard source is stable and well-known.
  - Calibration photometer in linear and stable during calibration procedure.
- Now operated by O. Widell (Swedish Space Institute since 2000)
- Instruments cross-calibrated at annual European Optical Meetings.

Portable Calibration Instrument

Very Compact Design

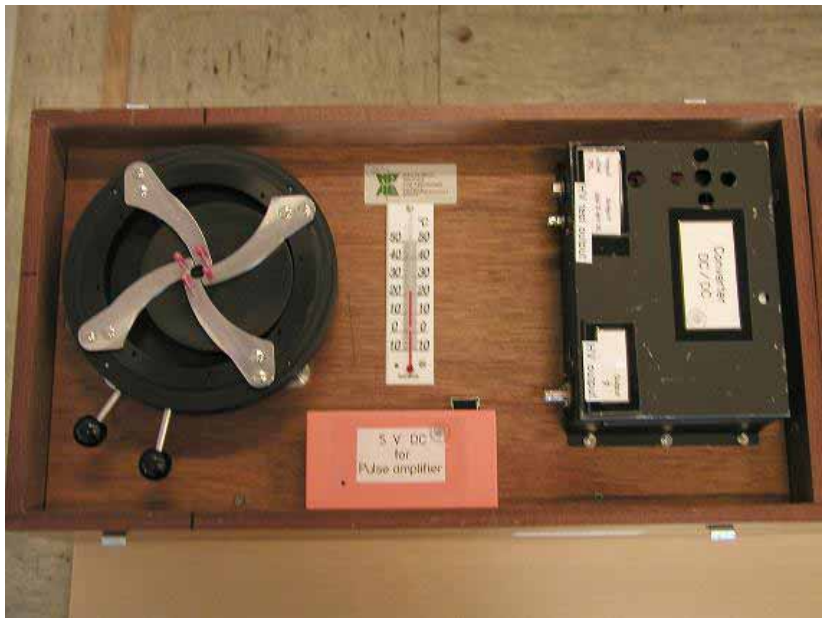

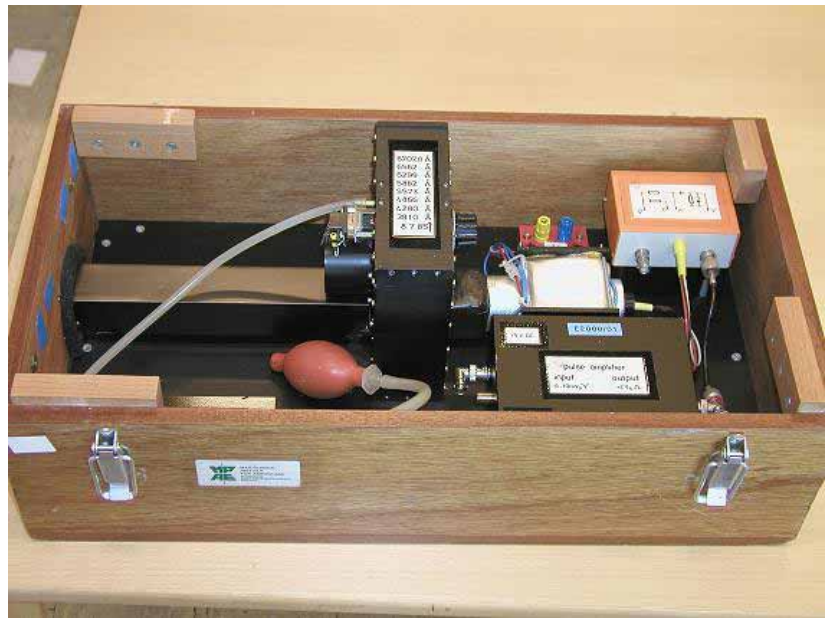

Simple Instrument Design

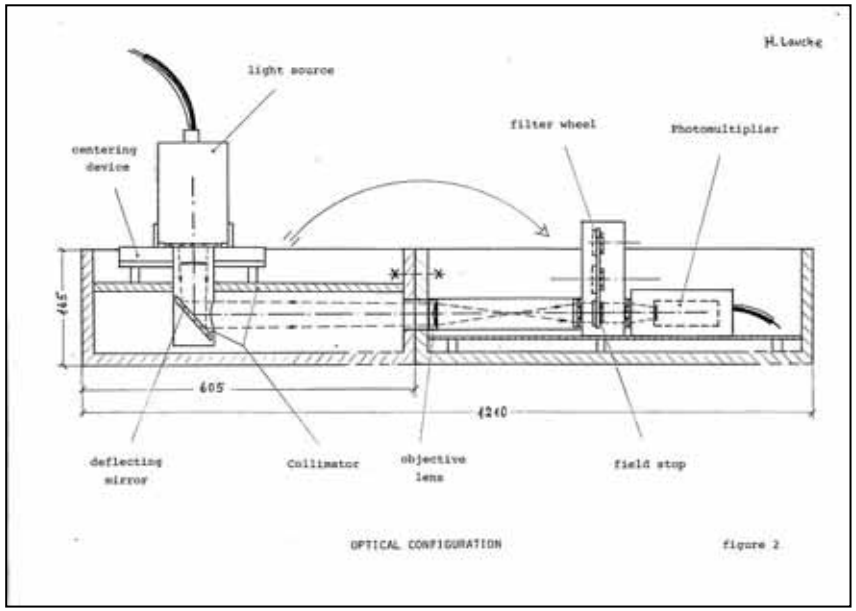

Optical Configuration

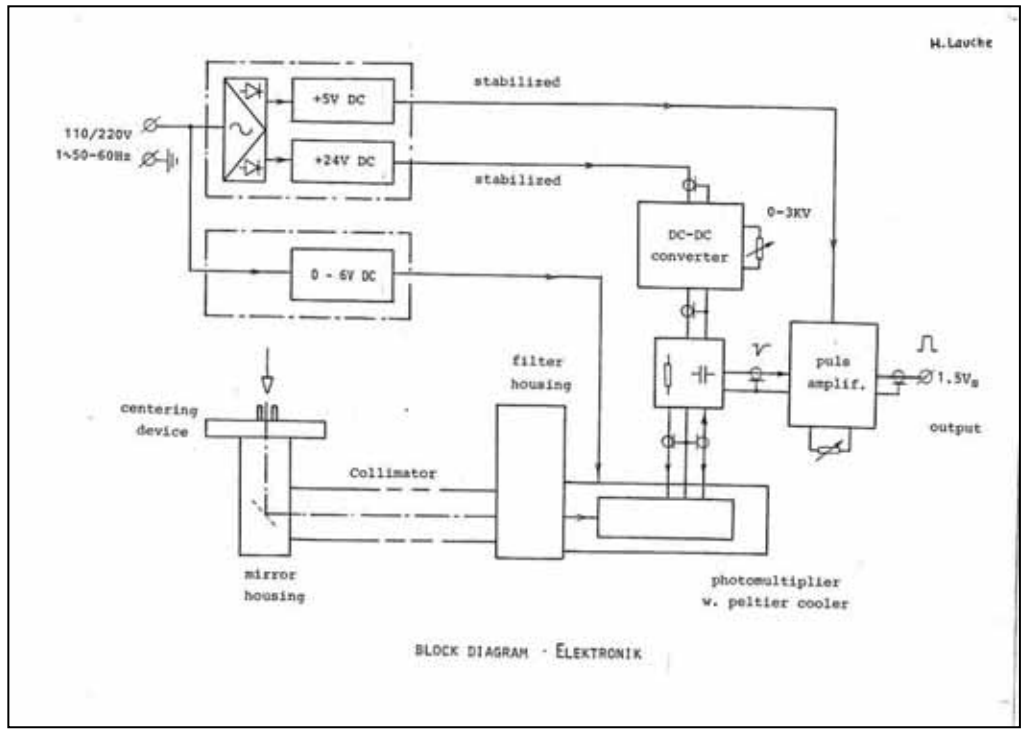

Electronic Block Diagram

Optical Calibration Workshop

Working Data Sheet

Date: ..... Place: ..... Observer: Ola Widell & Hans Henricson

Transfer Source: ..... Test Source: .....

Supply: .....Volt .....Current (A) Aperture: .....

Start time: .....
Stop time: .....

Room temperature: .....°C
thermistor resistance: .....ohm

Filter wheel position	0	1	2	3	4	5	6	7	8
Filter Peak λ (Å)	Black	3918	4280	4866	5573	5882	6299	6562	6707
Filter BW (Å)	---	41	27	25	16	13	12	15	6
Integration period (s)	10	10	10	10	10	10	10	10	10
Measurement 1 (pulses, Hz)									
2									
3									
Mean count rate (Hz)									
Mean count rate – dark count rate (black) (Hz)									
Photom. calib. $(c \times s^{-1} \times R^{-1} \times A)$									
Source brightness $(R \times A^{-1})$									
Previous calibration $(R \times A^{-1})$									
Brightness of Fritz Peak source (R/A)		0,34	5,7	3,2	2,6	5,1	9,2	10,2	

Note:

Photom. Calib. = Values "mean count rate – dark count rate" for Fritz Peak (FP) source.

Source Brightness = $\dfrac{\text{Brightness of Fritz Peak} \times \text{"mean counts – dark counts" for test source}}{\text{"mean count rate – dark count rate" for Fritz Peak (FP) source}}$

Previous Calibration = Use the values from last year for this test source.